LMI TECHNOLOGIES

Gocator® 2600 Series

3D SMART LASER LINE PROFILE SENSORS





Transparent Glue Inspection with Gocator 2610

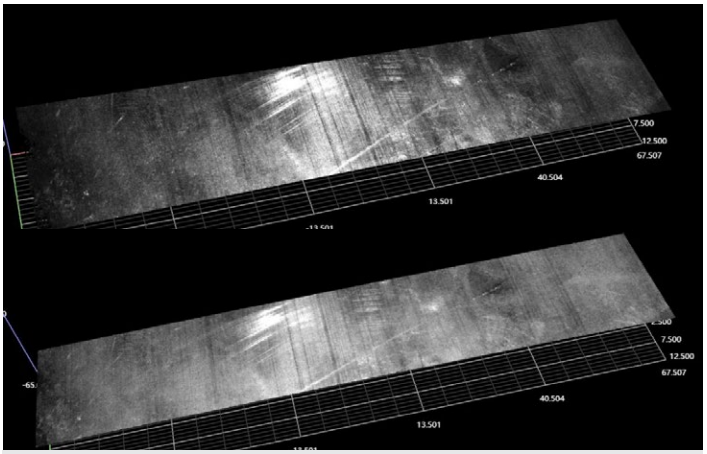

EV Lithium-Ion Battery 2D Intensity Scan without (top) and with (bottom) HDR

The remastered Gocator 2600 Series has been optimized for faster default scan speeds, enhanced data quality, increased scanning versatility, and higher 4K+ resolutions.

This remastered sensor lineup can be used to inspect a wide variety of targets from small parts in EV Battery, Consumer Electronics, and Semiconductor manufacturing, to larger coverage applications in Food Processing, Building Materials, Automotive, Rubber & Tire, and general factory automation.

- 9-Megapixel Imager
- Up to 4192 Points per Profile for High-Resolution Measurement and Inspection
- X Resolutions Up to 2.5 Microns
- Z Repeatability up to 0.2 Microns
- Fields of View Up to 2 m (at 0.55 mm X Resolution)
- On-Sensor Measurement Tools and I/O Connectivity
- Native Multi-Sensor Alignment and Networking Support

PROFINET® Modbus EtherNet/IP ASCII

HIGHER 4K+ RESOLUTION

The new **Gocator 2610** model generates profile and surface data at up to 2.5 microns X resolution for in-line dimensional measurement and microscopic surface defect detection on on small parts such as semiconductor Ball Grid Arrays (BGAs). The new **Gocator 2618** model achieves 5 micron X resolution at 20 millimeters field of view for specialized EV Battery applications such as pre-weld seam gap & flush measurement.

HIGH DYNAMIC RANGE MODE

The new **High Dynamic Range (HDR) Mode** improves scan quality on challenging targets that previously were susceptible to over or underexposed features (e.g. highly reflective metallic surfaces and objects with a variety of materials and finishes). Targets that previously required multiple exposures to scan challenging features may now be captured with a single exposure and faster cycle time.

FASTER DEFAULT SCAN SPEED

The Gocator 2600 Series has been optimized to provide higher default scan speeds. Existing job files will retain their original configuration and scan speeds.

ENHANCED DATA QUALITY AND SCANNING VERSATILITY

The Gocator 2600 Series has been optimized for surface flatness with a pre-processing pipeline to reduce spatial noise. This allows users to more accurately locate, measure, and identify features on a variety of targets and applications. The new **Gocator 2629** model delivers optimal speed and data quality over a large (>70 mm) field of view. Scan larger CE targets in a single pass with a single sensor, with sufficient optical performance for challenging inspection requirements such as verifying placement of thin adhesives.

2600 SERIES MODELS	2610	2618	2629	2630	2640	2650	2670	2690
Data Points / Profile	4192	4192	4192	4192	4192	4192	4192	3700
Scan Rate (Hz) [1]	1100 - 9000	700 - 10000	2500 - 9000	600 - 9000	600 - 9000	600 - 9000	600 - 9000	900 - 10000
Resolution X (µm) (Profile Data Interval)	2.5	5.0 - 5.4	18 - 23	18 - 33	28 - 46	47 - 104	67 - 197	124 - 550
Linearity Z (+/- % of MR) [2]	0.015	0.015	0.03	0.03	0.04	0.04	0.05	0.08
Repeatability Z (µm) [2]	0.22	0.38	0.30	0.30	1.00	2.70	10.00	12.00
Clearance Distance (CD) (mm)	19.4	44.5	110	110	170	330	495	325
Measurement Range (MR) (mm)	5.0	12	45	130	190	475	1060	1550
Field of View (FOV) (mm)	10.2 - 10.8	20 - 23	71 - 93	71 - 135	105 - 198	190 - 430	272 - 817	385 - 2000
Laser Class	2, 3R, 3B (405 nm blue)	3R, 3B (405 nm blue)	2, 3R, 3B (405 nm blue)	2, 3R, 3B (405 nm blue)	2, 3R, 3B (405 nm blue)	2, 3R, 3B (405 nm blue)	2, 3R, 3B (405 nm blue)	2, 3R (660 nm red)
Dimensions (mm)	50 x 116 x 125	46 x 80 x 110	55 x 105 x 165	55 x 105 x 165	55 x 105 x 195	55 x 105 x 280	55 x 105 x 280	55 x 105 x 280
Protective cover [3]	-	-	-	●	●	●	●	●
Weight (kg)	0.9	0.65	1.34	1.34	1.48	2.12	2.12	2.12

ALL 2600 SERIES MODELS	
Interface	Gigabit Ethernet
Inputs	Differential Encoder, Laser Safety Enable, Trigger
Outputs	2x Digital output, RS-485 Serial (115 kBaud)
Factory Communication	PROFINET, Modbus, EtherNet/IP, ASCII, Gocator
Input Voltage (Power)	+24 to +48 (15 Watts); Ripple +/- 10%
Housing	Gasketed metal enclosure, IP67
Operating Temperature	0 to 50°C (Gocator 2610: 0 to 40°C)
Storage Temperature	-30 to 70°C
Vibration Resistance	10 to 55 Hz, 1.5 mm double amplitude in X, Y, and Z directions, 2 hours per direction
Shock Resistance	15 g, half sine wave, 11 ms, positive and negative for X, Y, and Z directions
Scanning Software	Browser-based GUI and open source SDK for configuration and real-time 3D visualization. Open source SDK, native drivers, and industrial protocols for integration with user applications, third-party image processing applications, robots, and PLCs.

[1] **Speed Ranges** are from default configuration (full field of view and full measurement range) to high speed configuration (reduced field-of-view and measurement range, uniform spacing disabled, optimized data spacing and output, acceleration enabled).

[2] These results are achieved with LMI standard target and optimized sensor configuration.

[3] **Protective Covers** are now available for specific G2 sensor models. The cover protects the sensor's camera and laser windows from scratching caused by dust, debris, and cleaning.

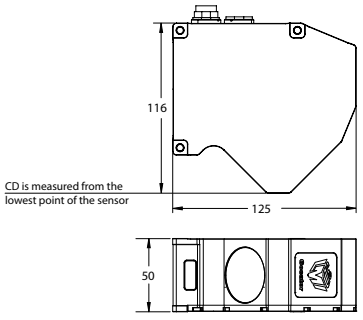

2610

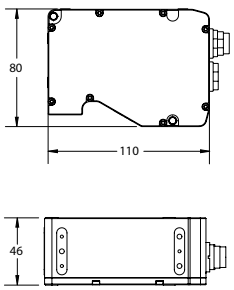

2618

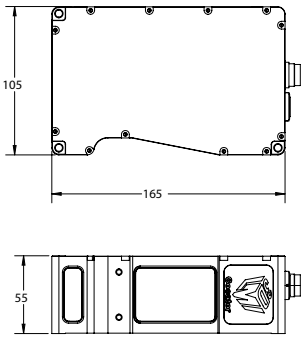

2629, 2630

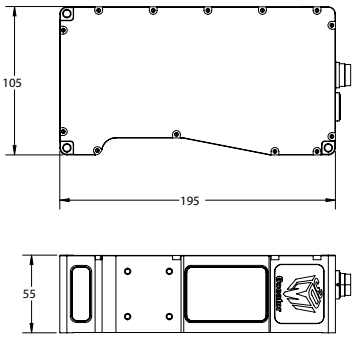

2640

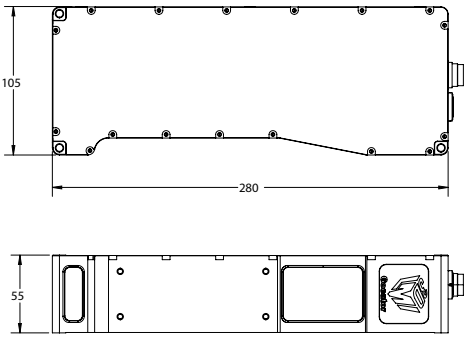

2650, 2670, 2690

©2023 LMI Technologies Inc. All rights reserved. Subject to change without notice.