MER2-1220-32U3M/C-W90(-S90)

MERCURY2 Series 12.2MP CMOS USB3.0 Area Scan Camera



The MER2-1220-32U3M/C-W90(-S90) camera with 90 degree angle lens mount, compared to MER2-U3 with standard lens mount, MER2-U3 camera with 90 degree lens angle mount has more installation flexibility.
The MER2-1220-32U3M/C-W90(-S90) camera is a monochrome/color USB3.0 Vision camera with the Sony IMX226 CMOS sensor. The sensor surface is at a 90 degree angle to the Data interface surface. The MER2-1220-32U3M/C-W90(-S90) has opto-isolated I/Os, and the GPIOs give MER2-U3 cameras maximum flexibility to adapt to specific needs. Compared to the MER2-1220-32U3M/C-W90, the image field of view of the MER2-1220-32U3M/C-W90-S90 is rotated 90 degrees.

Applications

Suitable for machine vision applications such as industrial inspection, medical, scientific research, education, security and so on.

Features

- Trigger mode: Frame Start /Frame Burst Start
- Decimation, Binning, Digital Shift and Black Level
- Adjustable Gamma for optimizing the brightness of images
- Color models support Light Source Preset, Color Transformation Control and Saturation
- Monochrome models support Noise Reduction and Sharpness
- Sequencer Control
- Support Global Reset Release shutter mode
- 90 degree angle lens mount enables the camera to be angle installed in harsh environment
- Programmable LUTs and User Set Control
- Support Timer and Counter
- Support Remove Parameter Limit to expand the range of exposure, gain and so on
- 16KB data storage area for saving algorithm coefficients and parameter configuration

Specifications

Model	MER2-1220-32U3C-W90	MER2-1220-32U3C-W90-S90	MER2-1220-32U3M-W90	MER2-1220-32U3M-W90-S90
Resolution	4024(H) × 3036(V)			
Sensor	Sony IMX226 Rolling shutter CMOS			
Sensor Format	1/1.7"			
Pixel Size	1.85μm × 1.85μm			
Frame Rate	32.3 fps			
ADC	12 bit			
Pixel Bit Depth	8 bit, 12 bit			
Mono/Color	Color		Mono	
Pixel Formats	Bayer RG8 / Bayer RG12		Mono8 / Mono12	
SNR	40.61 dB		40.77 dB	
Exposure Time	Standard: 10μs ~ 1s, Actual Steps: 1 row period			
Gain	0dB ~ 24dB; Default: 0dB, Steps: 0.1dB			
Binning	1×1, 1×2, 1×4, 2×1, 2×2, 2×4, 4×1, 4×2, 4×4			
Decimation	FPGA: 1×1, 1×2, 1×4, 2×1, 2×2, 2×4, 4×1, 4×2, 4×4			
Synchronization	Hardware trigger, software trigger			
Acquisition Mode	Single frame, Continuous, Software trigger, Hardware trigger			
Reverse X/Y	Reverse X/Y			
I/O Interface	1 input and 1 output with opto-isolated, 2 programmable GPIOs			
Data Interface	USB3.0			
Power Supply	Power through USB3.0 interface			
Power Consumption	< 2.7 W @ 5 VDC			
Operating Temp.	0°C ~ +45°C			
Storage Temp.	-20°C ~ +70°C			
Operating Humidity	10% ~ 80%			
Lens Mount	C / CS			
Dimensions	29(W) × 29(H) × 58.8(L) mm (with lens adapter, without I/O connectors)			
Weight	78 g			
Software	3rd-party software such as HALCON, MERLIC and LabVIEW			
OS	32bit / 64bit Windows, Linux, Android, ARMv7, ARMv8			
Conformity	CE, RoHS, FCC, ICES, UKCA, USB3.0 Vision®, GenICam®			

I/O Interface



Pin	Definition	Core Color	Description
1	Line0+	Green	Opto-isolated input +
2	GND	Blue	GPIO GND
3	Line0-	Grey	Opto-isolated input -
4	NC	Purple	NC
5	Line2	Orange	GPIO input/output
6	Line3	Pink	GPIO input/output
7	Line1-	White Green	Opto-isolated output -
8	Line1+	White Blue	Opto-isolated output +

Sensor Angle Direction

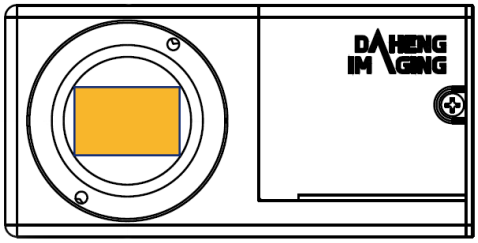

MER2-W90

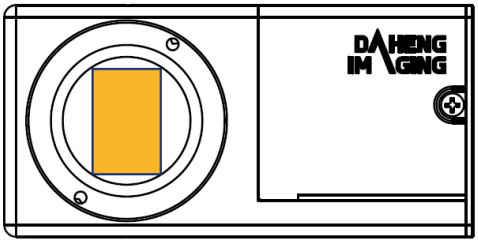

MER2-W90-S90

Spectral Response

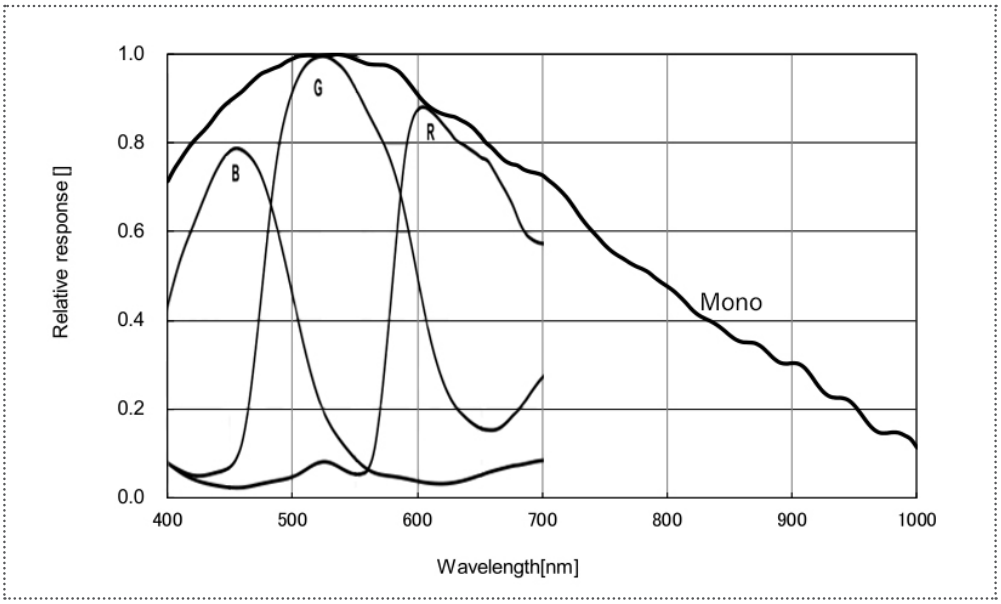

Technical Drawing

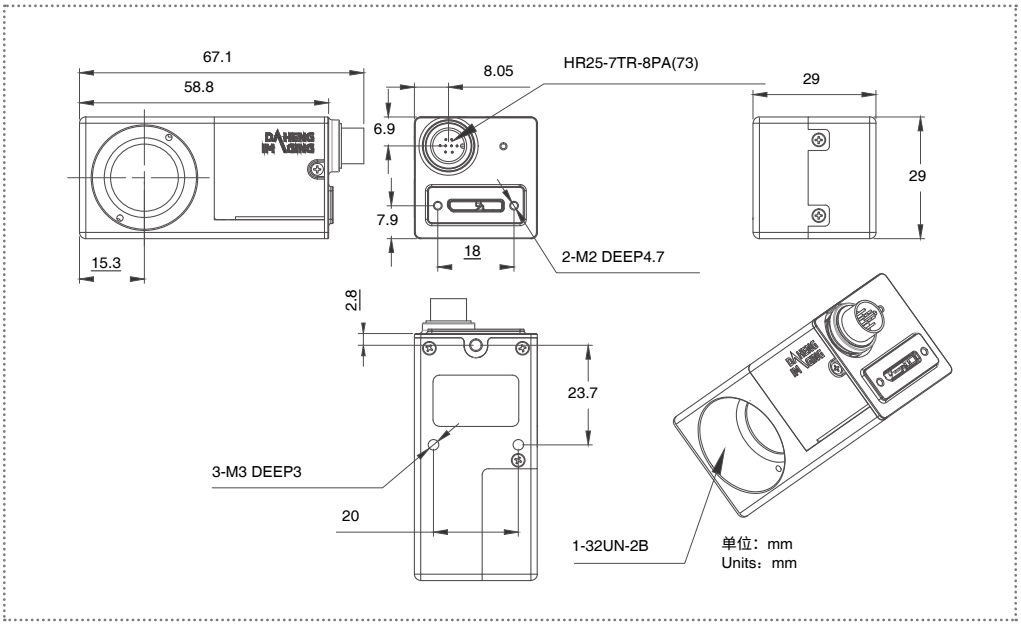

MER2-1220-32U3M/C-W90

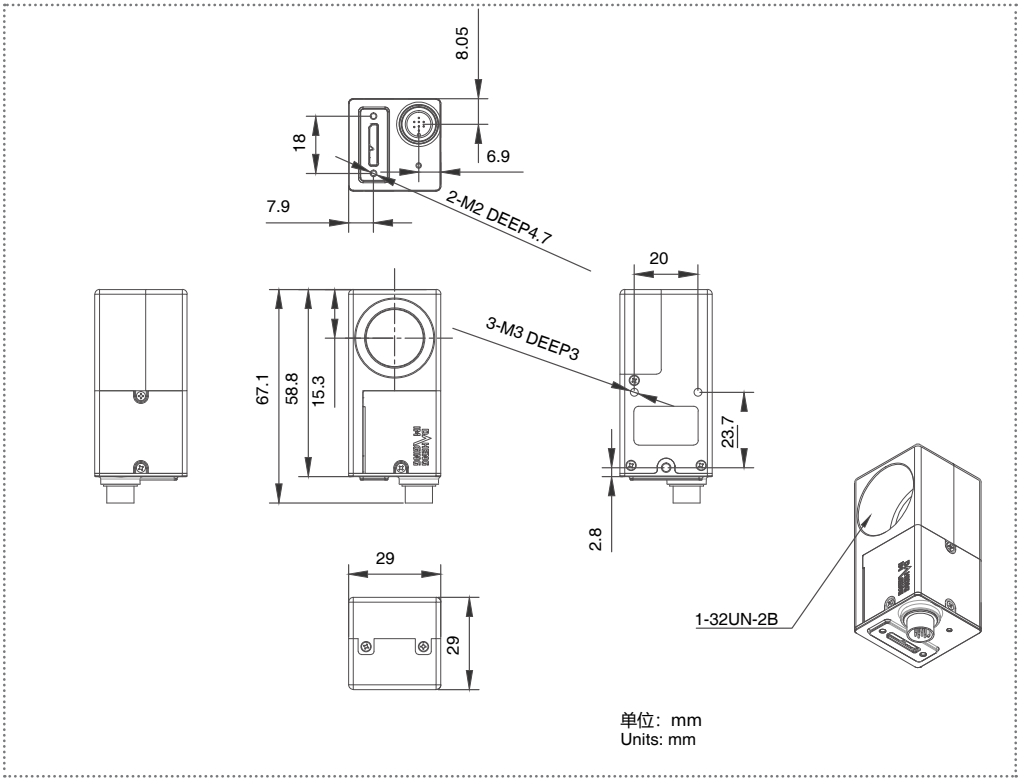

MER2-1220-32U3M/C-W90-S90